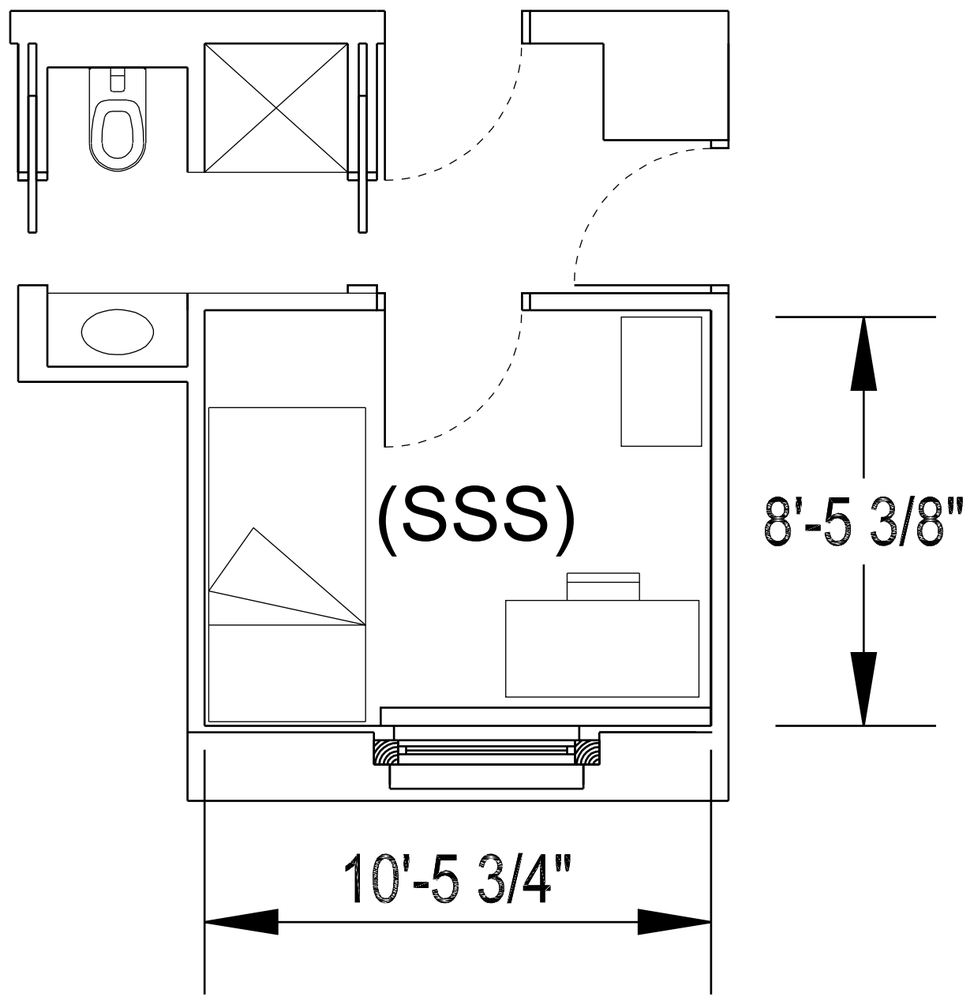
(SSS)
8'-5 3/8"
10'-5 3/4"